GDK-A DE-ICING ↗

EN

# Airport spreader for granular de-icing agents




**6–16 m³**
HOPPER

**4–1 600 g/m²**
APPLICATION RATE

**MAN · Mercedes-Benz · Scania**
OR THE MAKE OF YOUR FLEET

SUPPLIER · INTEGRATOR

**RUTHENIA ALBA**

SPREADER

GÜSTROWER

AIRPORT PARTNER

DAMMANN
Pflanzenschutztechnik
Fahrzeugtechnik
Airporttechnik




01 THE MACHINE ↗

# A spreader for runways, taxiways and aprons, mounted on the truck make your fleet is built on.

### WHAT IT SPREADS

GDK-A is the airport version of the GÜSTROWER GDK spreader. It spreads granular de-icing agents, anti-icing granulates, grit and mineral mixtures.

The chain conveyor and dual discs handle heavy and damp material. The rate is set in grams per square metre, the unit your winter service plans in.

### WHO STANDS BEHIND IT

GÜSTROWER builds the spreader. RUTHENIA ALBA works through the specification with your airport, fits the spreader to the chosen truck and supports it in service.

You get one contact for the machine, the truck integration and the spare parts.

| 6–16 m³ | 4–1 600 | 2 discs |
|---|---|---|
| HOPPER CAPACITY | G/M² APPLICATION RATE | BORDER SPREADING L / R |


1 Tarpaulin cover
2 LED work lights
3 Dual-disc spreading unit
4 Stainless guide plates
GÜSTROWER
STOP

02 ANY TRUCK ↗

# One spreader.




MAN MERCEDES-BENZ SCANIA + YOUR CHASSIS

# Your truck.

GDK-A is an interchangeable body on an intermediate frame. We mount it on the chassis you specify, of the make your fleet is built on, and connect it to the truck's hydraulics and electrics, or give it a pump of its own.




The same GDK-A body on three chassis. Visualisation.

**One fleet**

The same trucks, the same parts on the shelf, the same service intervals.

**One workshop**

Your mechanics keep working on a chassis they know. The spreader adds its own, simple maintenance.

**One cab**

Drivers stay in the cab they are used to. The spreader terminal is added to it.

03 RATE CONTROL ↗

# The rate is set in g/m² and holds at any driving speed.

GPS measures the driving speed and the conveyor follows it. When the driver slows down at a taxiway crossing, the spreader puts down less material per minute and the same amount per square metre.

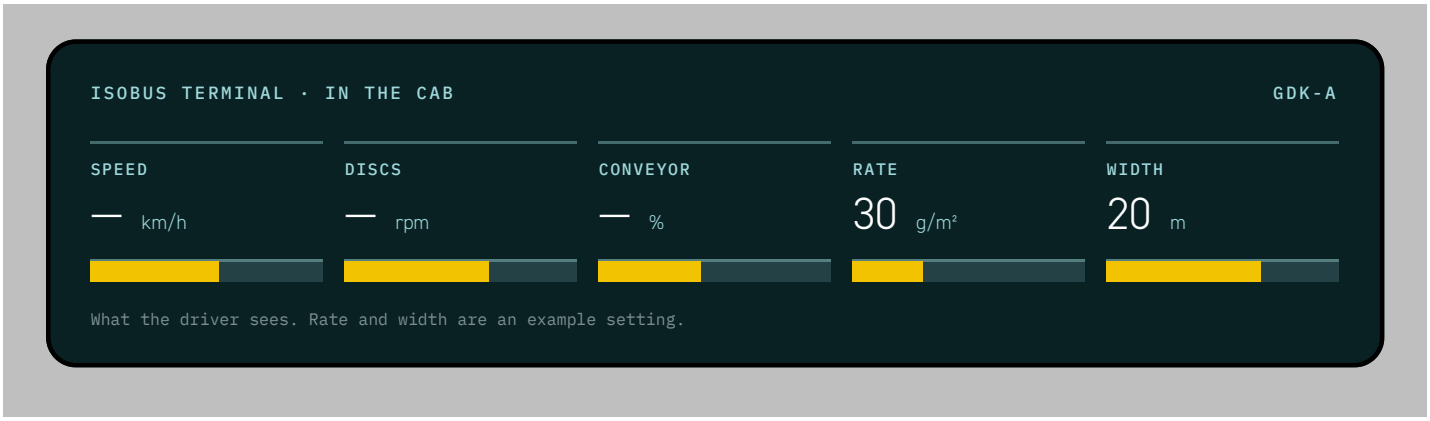

What the driver sees. Rate and width are an example setting.

- Electro-hydraulic control of the chain conveyor
- Border spreading left and right, switched electrically
- Rate adjusted in per cent from the terminal
- Hydraulic stabilisation of the disc speed

**4 → 1 600**

G/M², INFINITELY VARIABLE

**40–16 000**

KG/HA, THE SAME RANGE IN AGRICULTURAL UNITS



1 Spreading disc with stainless vanes




2 Adjustment scale on the spreading unit



3 Divided chute to both discs




4 Spreading unit under the hopper



5 Border deflector, stainless steel

04 HOW IT IS BUILT ↗

# A hopper, a conveyor, two discs and a frame that fits your truck.

Everything the airport sees and touches sits on the intermediate frame. The truck stays a truck.

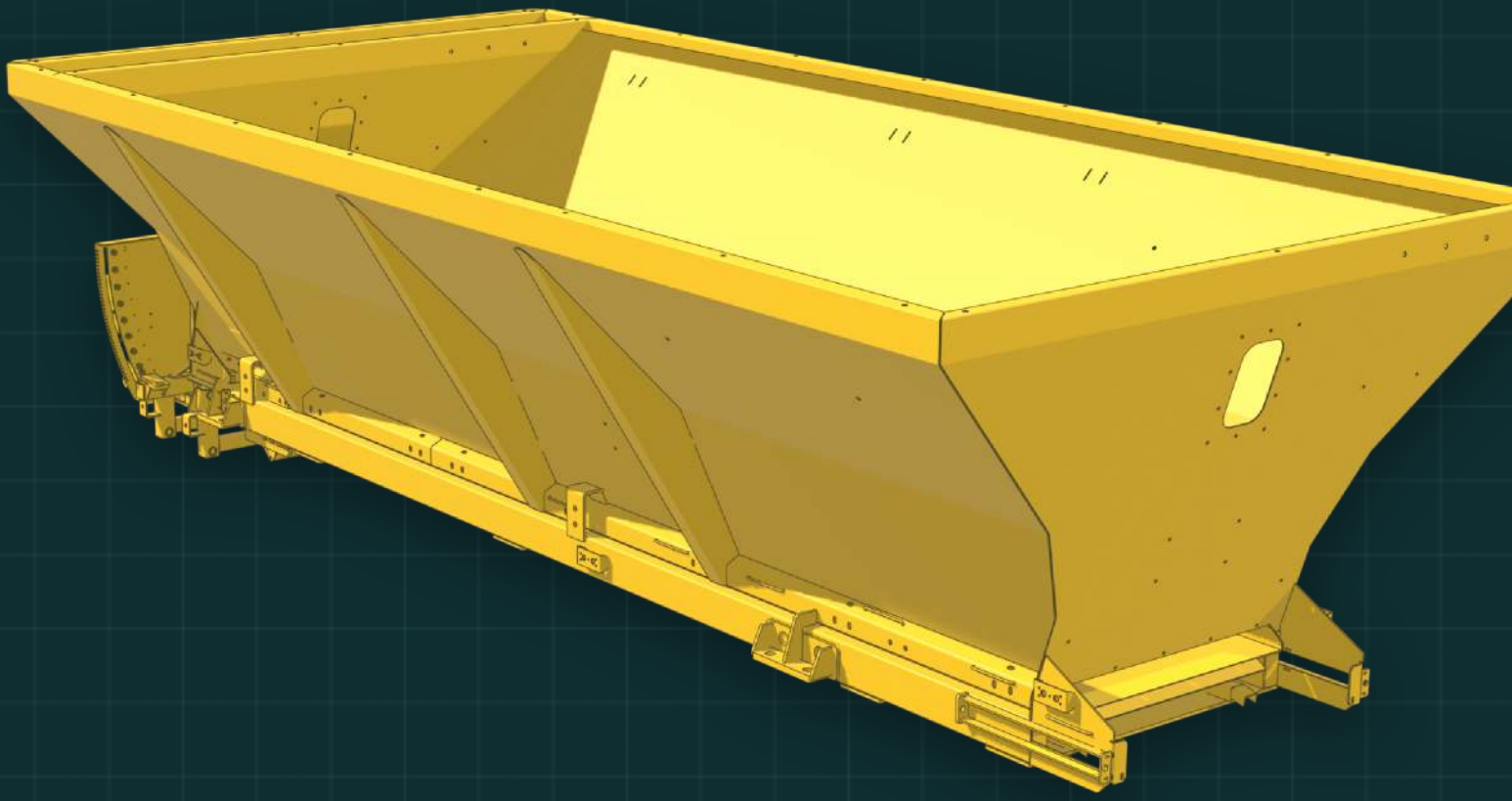

- Dual-disc spreading unit with border spreading left and right
- Chain conveyor along the hopper floor, electro-hydraulic speed control
- Service platform and ladder between cab and hopper
- Hopper 6–16 m³ with screens 80 × 80 mm and a hydraulic tarpaulin
- Intermediate frame between hopper and truck chassis
- Electrics 12 V with a 24 → 12 V converter




05 NIGHT SHIFT ↗

# Ready for the night shift.

**Light**

LED work lights on the spreading unit and a beacon on the hopper.

**Level**

An alarm when 2.5 t of material are left in the hopper.

**Airport equipment**

Prepared for the airport's own beacons, radios and transponder.

**Data**

A data output for the airport's vehicle data logger.




06 DELIVERY ↗

# From your specification to an accepted machine.

1 2 3 4

**Specification**

We go through your airport's specification with you and confirm the configuration in writing.

**Build**

The spreader is built and fitted to your chassis at the plant.

**Acceptance**

Rate test and weighing protocol before delivery, against one checklist signed by both sides.

**Training**

Commissioning at the airport and training for drivers and workshop.

> Built to your airport's specification and accepted against one shared checklist.




07 PARAMETERS ↗

# Technical data

## HOPPER AND FEED

| | |
|---|---|
| Hopper capacity | 6–16 m³ |
| Hopper screens | 80 × 80 mm |
| Residual-level alarm | 2.5 t |
| Tarpaulin | hydraulic |
| Conveyor | chain, electro-hydraulic |

## TRUCK INTEGRATION

| | |
|---|---|
| Mounting | interchangeable body |
| Frame | intermediate frame |
| Drive | truck hydraulics or pump |
| Operating voltage | 12 V |
| Converter | 24 → 12 V |

## SPREADING

| | |
|---|---|
| Application rate | 4–1 600 g/m² |
| Rate vs. speed | independent |
| Spreading system | dual disc |
| Border spreading | left / right, electric |
| Guide plates | stainless steel |

## CONTROL AND EQUIPMENT

| | |
|---|---|
| Terminal | ISOBUS |
| Speed signal | GPS antenna |
| Lighting | LED work lights, beacon |
| Access | service platform |
| Paint | RAL 1023 on request |

SPREADER

GÜSTROWER

GÜSTROWER Maschinenbau, Güstrow, Germany

AIRPORT PARTNER

DAMMANN® Pflanzenschutztechnik Fahrzeugtechnik Airporttechnik

HERBERT DAMMANN GmbH, Buxtehude, Germany. Airport and vehicle technology; DAMMANN takes part in airport tenders together with us.

# RUTHENIA ALBA

Specification, truck integration, delivery and service for airport spreaders.




**RUTHENIA ALBA**

ul. Niekłańska 35/1
03-924 Warsaw, Poland
+48 571 513 741
contact@ruthenia-alba.com
www.ruthenia-alba.com

**GÜSTROWER**

Neuwieder Weg 1
18273 Güstrow, Germany
+49 3843 2175-0
www.guestrower-landmaschinen.de

**DAMMANN**

Dorfstraße 17
21614 Buxtehude-Hedendorf
Germany
+49 4163 81630
www.dammann-technik.de